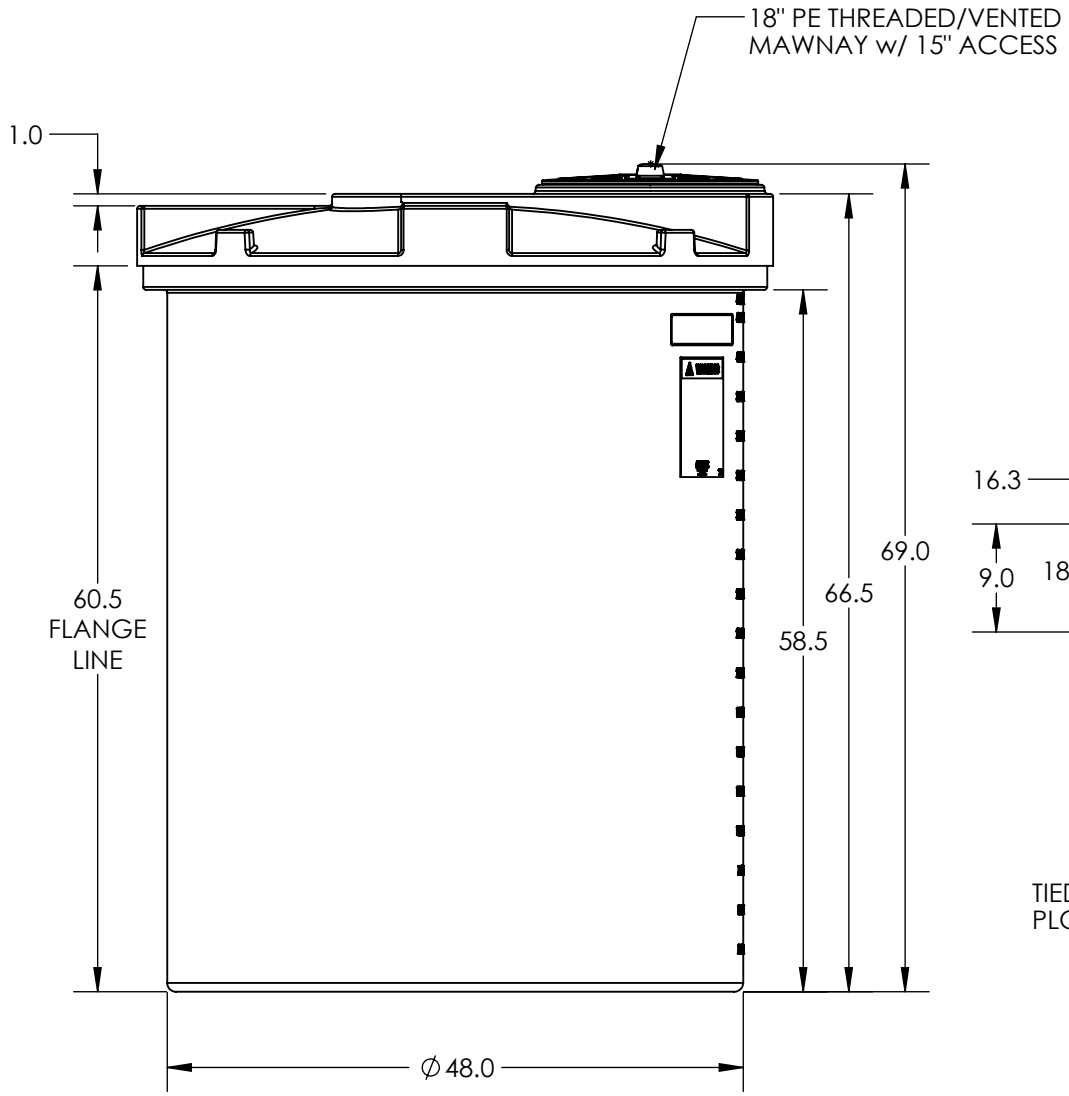

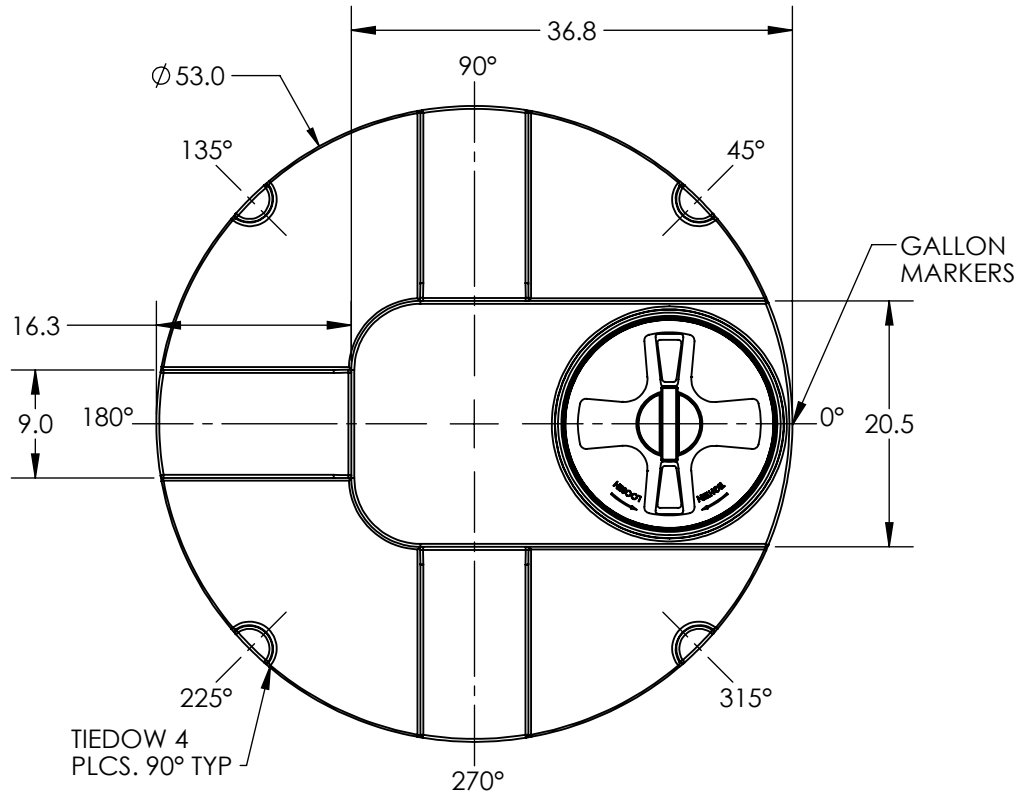

NOTE:
SOME GALLONAGE MARKS MAY BE REMOVED FOR FITTING PLACEMENT AS NEEDED.

***ALL EXTERNAL PIPING MUST BE INDEPENDENTLY SUPPORTED.**
***ONLY BASE FITTINGS TO BE LEFT INSTALLED AT TIME OF SHIPMENT PER SII PROCEDURE.**
***Consult Snyder's Guidelines for Use and Installation prior to delivery.**
Available on-line at http://www.snyderindustriestanks.com/Technical

ALL DIMENSIONS ARE IN INCHES, NOMINAL, & SUBJECT TO CHANGE WITHOUT NOTICE.
ALL DIMENSIONS ON ROTATIONAL MOLDED PARTS ARE SUBJECT TO A ± 3% TOLERANCE.

DO NOT SCALE	DRAWN BY	DATE
STATUS: **Released**	ET3	03/14/2014

© SNYDER INDUSTRIES INC., 2014

ALL DIMENSIONS, DESIGNS, AND INFORMATION ON THIS PRINT MUST BE CONSIDERED PROPRIETARY TO SNYDER INDUSTRIES, INC. AND MAY NOT BE USED, COPIED, OR DISTRIBUTED WITHOUT WRITTEN PERMISSION OF AN OFFICER (OR HIS AGENT) OF THE FIRM.

SII SNYDER INDUSTRIES, INC.
4700 Fremont Street
Lincoln, NE 68504
(402) 467-5221
www.snydernet.com

TITLE: **ASM TK 440VNT X 48**

REVISION: **A**

SHEET: 1 OF 1

PART NO. **5770100N**

ENG. ID. **D001736**